# MEASURING THE IMPEDANCE OF ULTRASONIC TRANSDUCERS

WALDEMAR LIS, JAN SCHMIDT

Gdansk University of Technology,
Faculty of Electronics, Telecommunications and Informatics
Department of Marine Electronic Systems
80-952 Gdańsk ul. Narutowicza 11/12, Poland
wall@eti.pg.gda.pl, yanie@eti.pg.gda.pl

*For ultrasonic transducers whose impedance is usually highly variable with frequency, impedance measurement is quite difficult. Cheap and easy devices which are currently available are not suitable for this purpose. Expensive scientific devices are known to be used; usually, they are designed for such measurements in a wide frequency band, from acoustic to microwave range. Simpler and cheaper devices with a narrower band are not commercially available. For hydroacoustic applications, the frequency range may be reduced to 1MHz or even 250 kHz in most cases. This article discusses the possibilities of building a simple and cheap automated system of measuring electric impedance of ultrasonic transducers used in hydroacoustics. The presented results are based on the concept of using a digital oscilloscope as the basic tool for measuring the impedance magnitude and phase. The results have been verified in the original measurement system.*

## INTRODUCTION

There are several methods of measuring impedance, ranging from very simple ones designed only for measuring its magnitude, to very complex ones, measuring real and imaginary parts or magnitude and phase of impedance. Their implementation can be more or less complicated and difficult. Problems arise when a relatively short time of measurement is required. The accuracy and frequency range are very important in this case. Often, e.g. during the technological process of adjusting the acoustic transducer, it is necessary to repeat the measurements [3], which basically rules out the precise bridge methods. In this case it is convenient use simple measurements of the impedance magnitude and phase. Measuring the impedance magnitude is fairly easy, although in some cases – especially without load – the high dynamics of impedance variability with frequency can make it somewhat more complicated. On the other hand, precise phase measurements are usually quite hard – especially for higher frequencies. This article discusses in detail allowable errors of

measuring transducer impedance magnitude and phase. Then, a new solution for automated complex impedance measuring is proposed. Important parameters of the system which are required for achieving the desired accuracy and frequency band are emphasized.

## 1. MAGNITUDE OF THE IMPEDANCE MEASUREMENT METHODS

The simplest method of measuring the impedance magnitude is analyzing the voltage drop in an impedance divider circuit shown in Figure 1 [1]. To avoid the need to measure the phase, the value of resistor R is large enough to assume that the current depends only on R and $U_1$. This condition is satisfied when R is much larger than the impedance magnitude of the examined transducer.

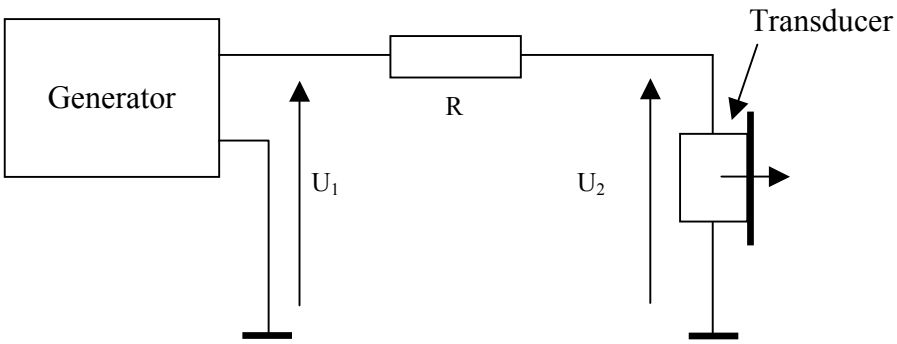


Fig. 1. Block diagram of the impedance magnitude measuring circuit

In such a circuit, voltage $U_2$ is practically proportional to the modulus. This condition is not always easy to satisfy. When the transducer impedance magnitude is highly variable with frequency, then resistance R – which satisfies for the maximum value abs($Z_e$) the condition "R>>abs($Z_e$)" – satisfies the condition for the minimum value of abs($Z_e$) with ease, but may attenuate the generator signal too much. Voltage $U_2$ may drop below noise level and become hard to measure. This problem can be solved by using a high output voltage generator, or measuring voltage $U_2$ with a selective microvoltmeter tuned concurrently with the z generator.

Figure 2 presents a block diagram of such a solution based on a B&K heterodyne analyzer.

In the automatic transducer impedance magnitude measurement circuit (Fig.1, Fig.2), an A/D converter serves as the $U_2$ voltage sensor. The converter should allow the measurement of the signal amplitude in the range equivalent to the variability of transducer impedance magnitude. Experience shows that the electric impedance magnitude of transducers without casing and load may vary with a dynamic range of approx. 90dB. This means that the A/D converter must also have a similar dynamic range. Thus, it should be a 16-bit converter.

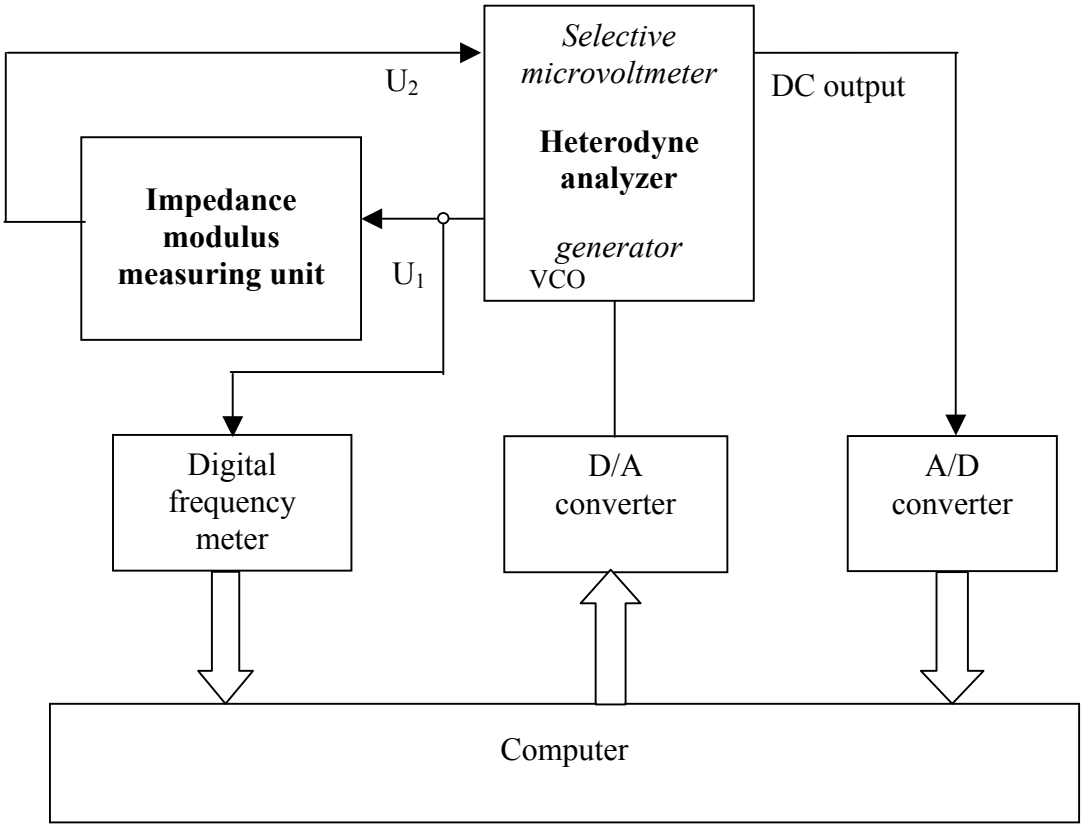


Fig. 2. A unit designed for automatic measurement of the transducer impedance magnitude

The second important property of the A/D converter, apart from its dynamic range, is the operating frequency. It may be assumed that an amplitude peak detector will be used, then the frequency can be very low – it is only dependent on the system operation cycle, i.e. tuning the stimulating signal frequency and reading the result. Typical values do not exceed 10Hz. When such a detector is not available, the D/A converter must sample the signal with a sufficiently high frequency. For example, the required sampling frequency was calculated for a 250kHz signal. The measurement error was assumed at 1% . The sampling frequency can be obtained from the simple relationship (1).

$$f_p = f_s \frac{2\pi}{\frac{\pi}{2} - \arcsin\left(\frac{100-\chi}{100}\right)} \qquad (1)$$

where: $f_s$ – signal frequency,
$f_p$ – sampling frequency,
$\chi$ - required measurement accuracy (%).

Simple calculations give the sampling frequency of approx. 11MHz. When the signal frequency increases to, say, 1MHz, the sampling frequency rises to approx. 44MHz.

## 2. IMPEDANCE MAGNITUDE AND PHASE MEASUREMENTS

Measuring impedance phase is a separate issue. In the traditional solution, the measurement was based on an HP circuit analyzer. This device allows to measure the ratio of voltages in two channels and the phase shift between the signals. A block diagram of this system is shown in Figure 3.

Using a simple divider circuit consisting of resistor R connected in series with the transducer of electric impedance $Z_e$, it is possible to determine real and imaginary parts of admittance $Y_e$, and then the transducer impedance $Z_e$ as its inverse (2).

$$\mathrm{Re}(Y_e) = \frac{1}{R}\left(1 - \frac{U_1}{U_2}\cos(\varphi)\right),\ \mathrm{Im}(Y_e) = -\frac{1}{R}\frac{U_1}{U_2}\cos(\varphi), \qquad Z_e = \frac{1}{\mathrm{Re}(Y_e) + j\mathrm{Im}(Y_e)} \qquad (2)$$

In the magnitude and phase measurement system, the condition $R \gg abs(Z_e)$ is unimportant. Therefore, a smaller resistor R can be used. This is good for two reasons: the $U_2$ voltage drop is smaller, and the measurement accuracy of voltage $U_2$ and phase φ is better. The best accuracy is achieved when R is comparable to the transducer impedance magnitude.

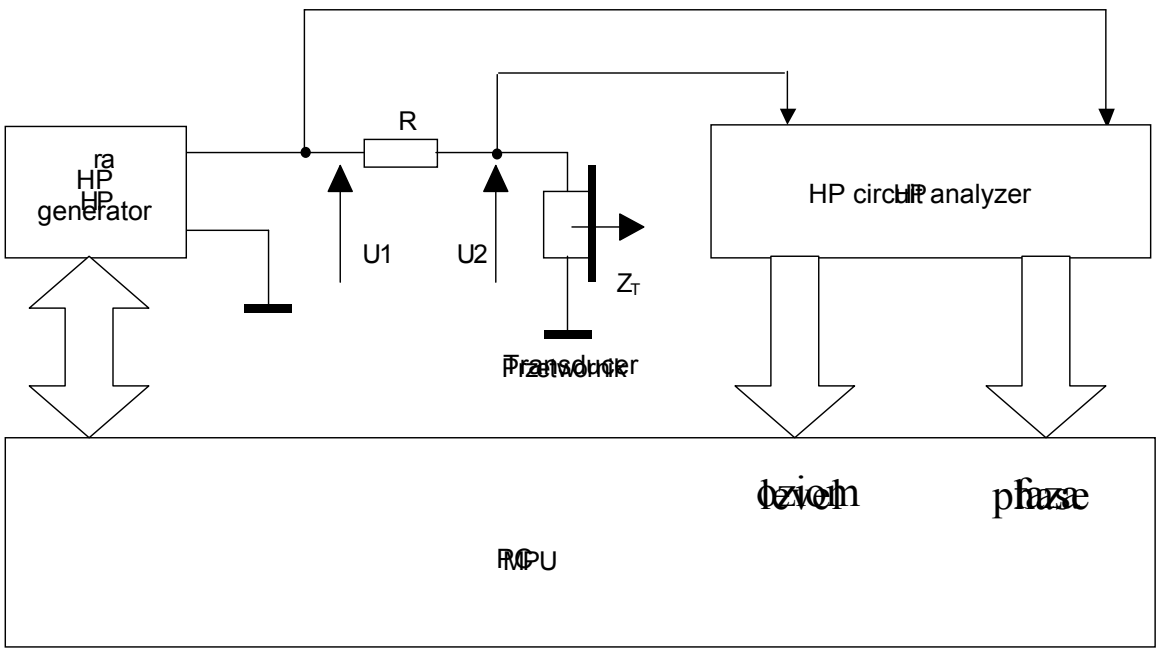


Fig. 3. Block diagram of a unit designed for measuring electric impedance of ultrasonic transducers

Due to the high cost of a circuit analyzer and the fact that its manufacturing is to be discontinued, it is necessary to find an alternative based on easily available components. The currently offered devices for measuring electric impedance for variable frequency are very complex. Their features outperform the needs of ultrasonic techniques. Therefore, such devices are very expensive. This prompted us to analyze the feasibility of constructing a customized measurement system.

The key problem is the issue of measuring the phase shift between two harmonic signals whose amplitudes may differ by up to 90dB. We propose to measure the phase shift by counting clock pulses between zero-crossings of both signals.

Figure 4 shows a block diagram of the proposed solution. The computer controls the operation of the generator which delivers the signal to the transducer via resistor R. The voltage $U_2$ on the transducer is measured by a 16-bit A/D converter. The phase is measured by counting clock pulses in the time window limited by slopes of the first and second signal, respectively.

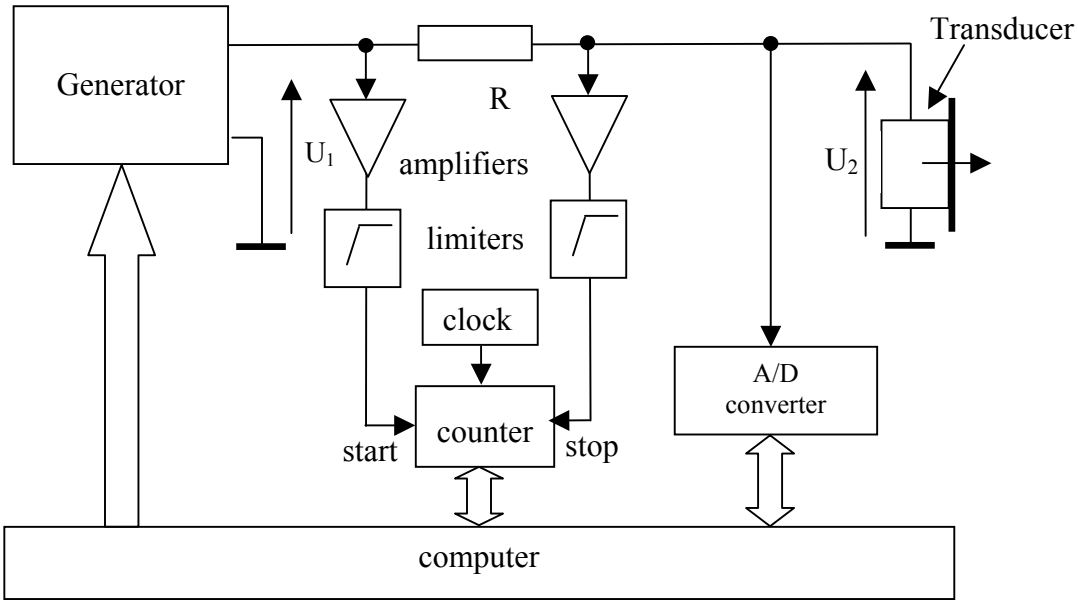


Fig. 4. The proposed unit for measuring electric impedance of ultrasonic transducers

The operating frequency of the counter and clock is an important issue. It depends on the required measurement accuracy. Experience shows that the phase should be measured with approx $1^0$ accuracy. Therefore, the operating frequency of the counter and clock should be 360 times greater than the transducer test frequency. For instance, to measure the impedance at 250kHz, a 90 MHz clock should be used.

To test the proposed concept, several auxiliary measurements of ultrasonic transducer impedance were made. A typical embedded transducer was used, designed for operation with an acoustic ranging echosounder. The transducer had two resonance frequencies in the band from about 60kHz to about 90kHz. The measurements were performed using a digital oscilloscope in a wide frequency band from 10kHz to 100kHz. Readouts were taken right from the oscilloscope screen using time and voltage markers. Voltage $U_1$ (Fig.1) was observed in the first oscilloscope channel, while $U_2$ was observed in the second channel. The phase shift between the two signals was determined on the basis of the delay. The delay was measured using deliberately overdriven signals in both oscilloscope channels (sensitivities set to maximum). This method allowed to achieve maximum steepness of slopes of both signals seen on the screen (at zero-crossing).

Similar measurements of electric impedance of the same transducer were performed in a system based on the HP circuit analyzer (Fig.3).

Figure 5 presents the measurement results for both methods.

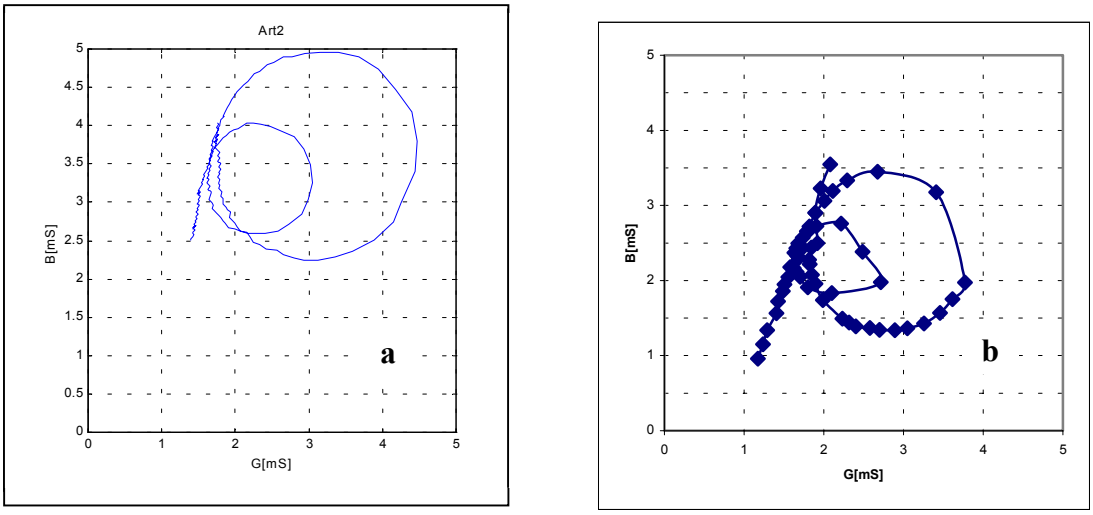


Fig. 5. The transducer admittance measured a - using the HP circuit analyzer, b- using a digital oscilloscope

## 3. CONCLUSIONS

The results of measuring ultrasonic transducer impedance using a digital oscilloscope are largely consistent with the values obtained using a circuit analyzer. Some discrepancies were caused by the fact that the oscilloscopes use 8-bit A/D converters which do not provide sufficient dynamic range. Nevertheless, the similar results support the assumed system concept. Assuming that the system will only be used for measuring the amplitude and phase for frequencies up to 250 kHz its manufacturing cost can be considerably low.

## REFERENCES

[1] Zenon Jagodziński "Przetworniki ultradźwiękowe" WKŁ Warszawa 1997.

[2] Richard G. Lyons "Wprowadzenie do cyfrowego przetwarzania sygnałów" (original version: *Understanding Digital Signal Processing*) WKŁ Warszawa 1999.

[3] Grażyna Łypacewicz "Piezoelektryczne układy nadawczo-odbiorcze dla celów ultrasonografii" Prace Instytutu Podstawowych Problemów Techniki PAN Warszawa 22/1995.

[4] Marek M. Stabrowski "Cyfrowe przyrządy pomiarowe" WN PWN S.A. Warszawa 2002.