Proceedings of the 2nd EAA International
Symposium on Hydroacoustics
24-27 May 1999, Gdańsk-Jurata
POLAND

The Sea Surveillance Sonar

Klaus Kremer [1], Yitshak Peery [2]

[1] a.r.s. TECH - applied radar & sonar TECHNOLOGIES GmbH
Am Seedeich 45, 27572 Bremerhaven, Germany

e-mail: arsTECH@t-online.de

[2] DSI – Decision Systems Israel, Ltd.
11, Ben Gurion Street, Givat Shmuel 54017, Israel

e-mail: perry@dsi.co.il

The main objective of a sea surveillance sonar is the surveillance of marine activities below the waterline in selected areas like coasts, waterways, naval bases and oil platforms.

The sea surveillance sonar can prove to be extremely beneficial in countering illegal activities that can strain a nation's economy. These activities include sabotage, piratism, terrorism, smuggling and illegal immigration.

A combined sonar consisting of a low frequency passive system and a high frequency active system can be used to detect, track and classify all subsurface contacts like submarines, divers and diver delivery vehicles within its assigned coverage area. In case of silent submarines a vertical transmitting array is supporting the detection of these targets in the low frequency range.

The system is of a flexible open architecture so that it can easily be tailored to local needs. As operational support a sonar performance prediction system is integrated. The system has been tested. Experimental results will be shown.

The Sea Surveillance Sonar

The sea surveillance sonar (*Fig. 1*) is designed to protect installation like

- Naval bases
- Harbours
- Oil platforms
- Off-shore installations and equipment

The sea surveillance sonar can be used to detect, classify and track automatically surface and subsurface contacts like

- Mini-submarines
- Diver delivery vehicles
- Divers

within the assigned coverage area.

The sea surveillance sonar can prove to be extremely beneficial in countering illegal activities like

- Pirating
- Terrorism
- Smuggling
- Illegal immigration
- Drug trafficking

The benefit of the sea surveillance sonar will be demonstrated on the surveillance of a harbour and the fairway to the harbour (*Fig. 2*).

A chain of sonar nodes (*Fig. 3*) at the bottom of the sea is seeded along the harbour and the fairway. The sonar nodes are equipped with diver detection sonar and communication systems.

At the end of the chain a passive sonar system with two orthogonal nested linear arrays is mounted at the bottom of the sea. In high noise environments, the detection of submarines and diver delivery vehicles will be supported by a medium frequency active sonar system.

The chain of sonar nodes and the active and passive sonar system at the end of the fairway are connected via cables with the surveillance centre in the harbour.

AUV's are patrolling on predetermined routes in a given waterdepth in the area of interest. Their sensor information will be transmitted via a communication link to the nearest bottom node and so to the surveillance centre. Due to these sensors, the overall detection capabilities of the system will be increased.

Table I. Sonar System and Targets

Sonar System	Target	Target Location
diver detection sonar	combat divers diver delivery vehicles swimmers	surface to the bottom at the surface*
passive sonar	normal and midget submarines small boats**	below the surface to the bottom
active sonar	normal and midget submarines in very silent run diver delivery vehicles	below the surface to the bottom
AUV forward looking	divers	near the bottom
AUV side scan	divers	near the bottom
AUV subbottom profilers	mines	in the sediment

* Could also be detected by the E/O system
** Positioning data could be correlated with that of the RADAR

System Components

Diver Detection Sonar

This is an active high frequency sonar (*Fig. 4*) capable of detecting, classifying and tracking small targets such as divers and small submersibles. Each system is comprised of underwater „acoustic node" and a shore unit. The acoustic node includes the transmitting array, receiving array and „front-end" electronics. The shore unit includes signal processing electronics, controlling computer and operator console. The acoustic node and shore unit are connected by an underwater cable that is comprised of fibre-optic wires for the signals and copper wires for the power. The acoustic nodes will be installed inside the harbour (one in the harbour centre and one in the entrance) and additional 5 - 7 acoustic nodes will be installed outside the harbour to detect threats on the way to the harbour. All acoustic nodes operate simultaneously without mutual interference. The proposed sonar is a unique large receiving array with 360 receiving beams resulting in excellent detection range and very low false alarm rate performance. The sonar is also capable of handling hostile acoustic jammers.

Low/Medium Frequency Active/Passive Sonar

This is a static sonar system (*Fig. 5*) comprised of two horizontal nested receiving hydrophones line arrays at the bottom of the sea, orthogonal to each other and one vertical transmitting array for active mode operation. The system operates at a medium frequency (3.7 kHz in active mode and 10 - 10 000 Hz in passive mode). The system is installed on the sea bottom outside the harbour (about 10 - 15 km from the harbour) and is used to detect and classify small and quiet submersibles (such as SDV) and submarines that may threat the harbour by laying mines and launching SDV's and divers into the harbour. This system also will be able to detect surface targets that should be separated from the underwater targets by means of the sonar classification capability and correlation with information from other sensors (radar and EO systems).

Mobile Platform

It is used to perform underwater unmanned search and surveillance of the harbour and its vicinity. It includes sonar and TV camera as surveillance sensors. It is realised as AUV (*Fig. 6*) that is remotely controlled by wireless acoustic communication. The mobile platform will support long missions and fast battery replacement.

Surveillance Centre (SC)

The SC is the central integrating element of the HSS. All sensor detection and classification data are transferred to the SC for post processing (correlation, fusion, tracking etc.). Other harbour sensors that are not a part of the HSS (such as radar, E/O and electronic underwater net) will be integrated to the SC. The SC is also connected via data communication channels to other systems in the naval base to provide complementary intelligence and other types of data (weather, manpower, etc.).

The surveillance centre's primary missions are

- Presentation of a complete and comprehensive situation (tactical) display combining the surveillance reports originated from the various sensors.
- Control and coordination of defensive engagement and target intercept activities while encountering any intrusion attempt.

The surveillance centre's secondary missions are

- Sensors' availability, BIT status, technical and operational readiness monitoring, fault detection and localisation.
- Built-in training capability enabling both technical/operational training of sensors and SC operation and on the other hand, a combined tactical exercise involving all the units in the complex operation of the harbour defence.
- Data recording for post mission play back.

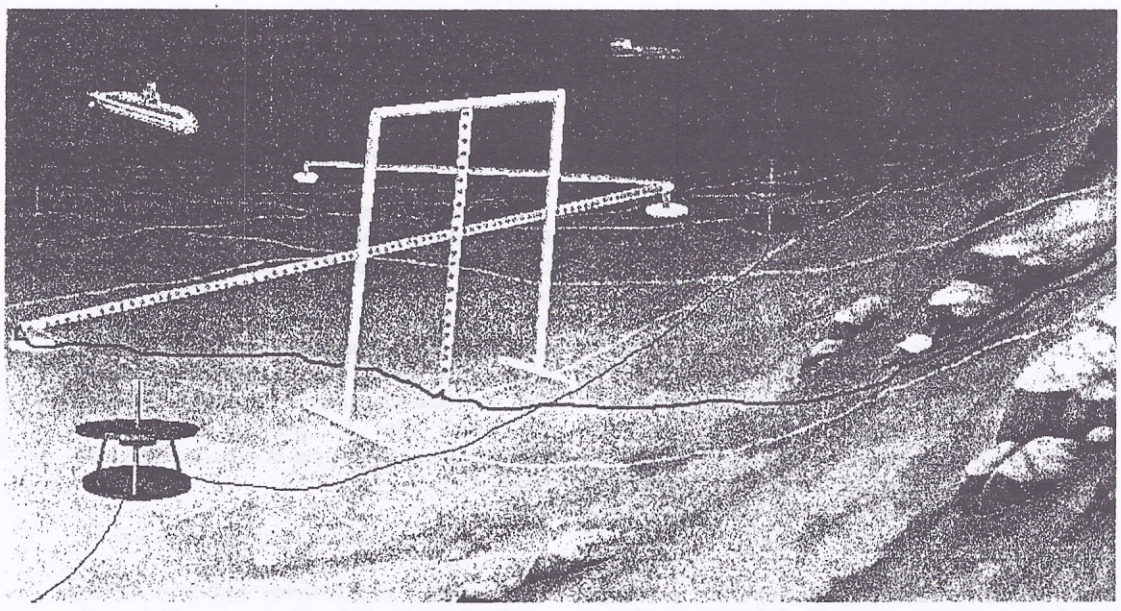

Fig 1: Sea Surveillance Sonar

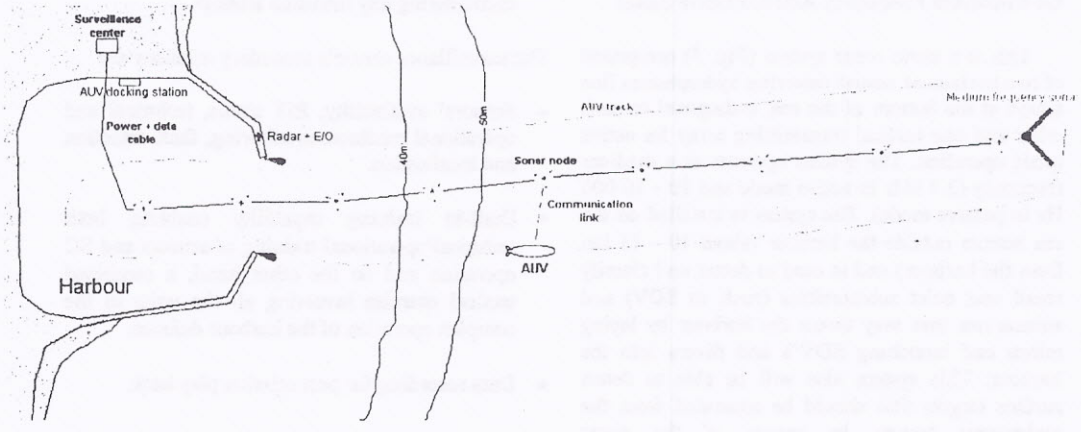

Fig 2: Surveillance of harbour and fairway

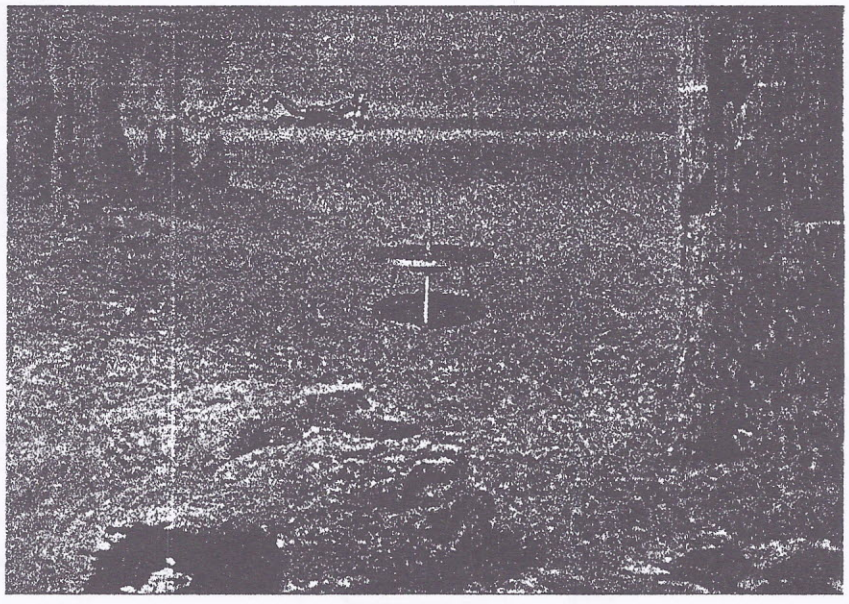

Fig 3: Diver detection node

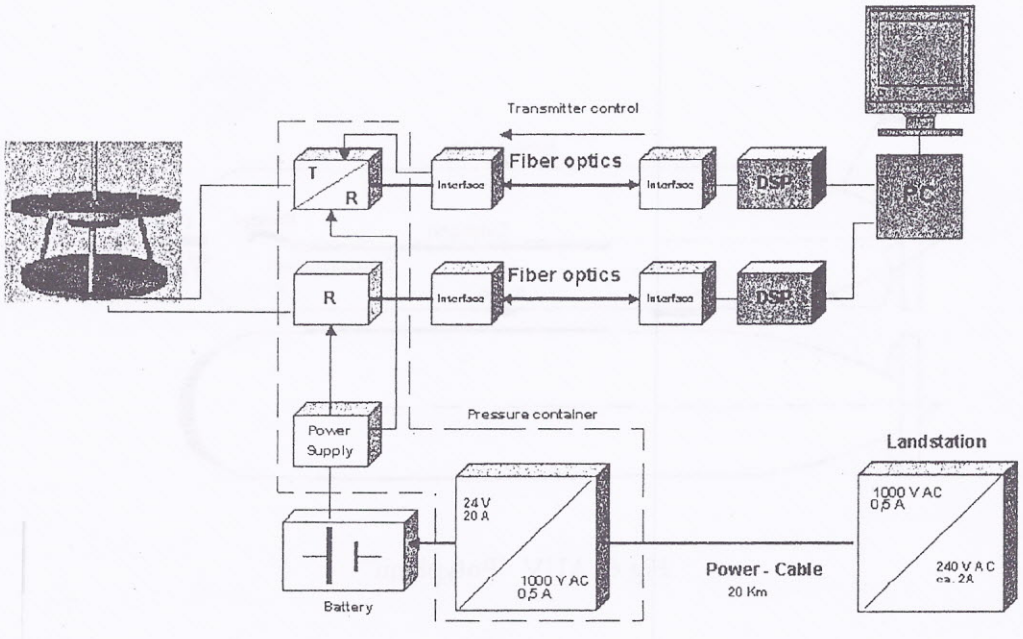

Fig 4: Diver detection sonar

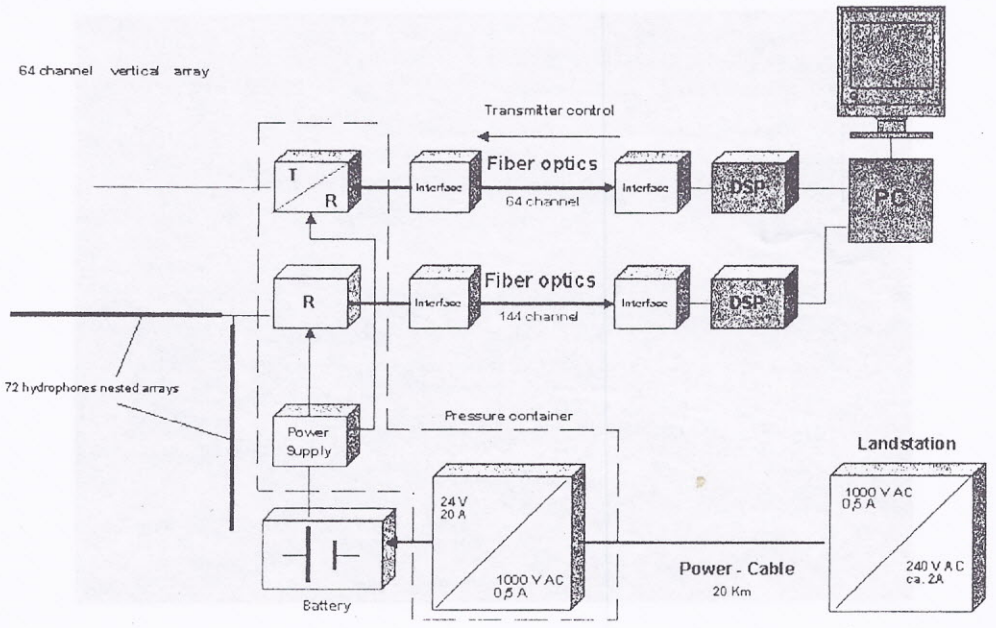

Fig 5: Medium frequency sonar

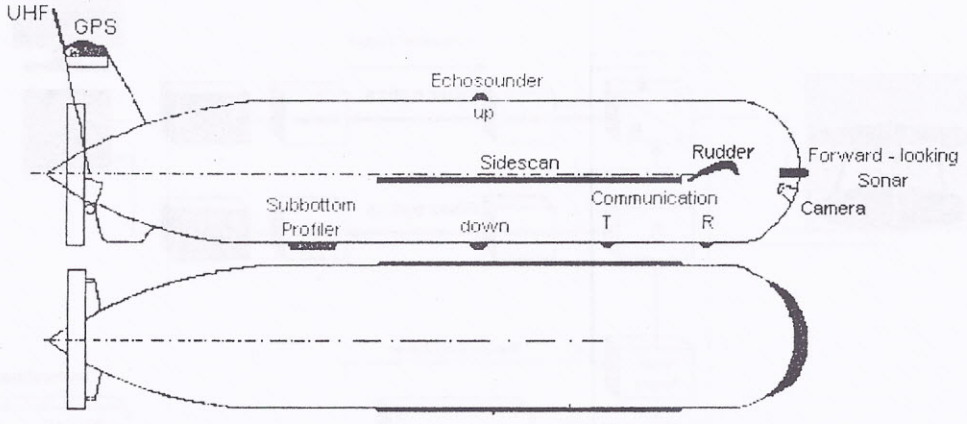

Fig 6: AUV "Polyphem"